NOTE:

1. (XX / XX) FIGURE ABOVE LINE INDICATES ITEM NO. FIGURE BELOW LINE INDICATES QTY. REQD.
2. USE LOCTITE #271 (RED) ON ITEM #45.
3. HOSE LENGTHS ARE APPROXIMATE. CUT LENGTH AS NEEDED.

ITEM	PART NO.	DESCRIPTION	QTY
1	8300-4500	CARRY CAN-DUAL TL FRONT MT.	1
2	1900-3252	TL1120(TOP HOLES) F.L.B. LIFTER	2
3	043-0840	CHAIN RING	2
4	6083-1021	HAND VALVE ASSY W/FITTING	2
5	6063-1525	FLOW DIVIDER CARTRIDGE	1
6	6096-0015	FLOW DIVIDER HOUSING	2
7	6220-0606	FITTING (#6 MSAE X #6 MJIC)	6
8	6221-0606	90° SHORT (#6 MSAE X #6 MJIC)	2
9	6222-0606	90° LONG (#6 MSAE X #6 MJIC)	2
10	6246-0006	#6SAE O-RING PLUG	2
11	6246-0010	#10SAE O-RING PLUG	1
12	6510-0606	3/8" WEATHERHEAD HYD. HOSE	640"
13	6514-0608	ST. HOSE END (3/8" x 1/2 NPT)	2
14	6515-0606	ST. HOSE END (3/8" x #6 JIC)	14
15	6516-0606	HOSE END - 3/8" x 90° JIC	4
16	6525-0510	MALE - QUICK DISCONNECT	1
17	6525-0511	FEMALE - QUICK DISCONNECT	1
18	6525-0512	QUICK DISCONNECT CAP	1
19	6525-0513	QUICK DISCONNECT PLUG	1
20	6530-0010	HOSE CLAMP COVER PLATE	15
21	6530-0012	TWIN CLAMP HEX BOLT	15
22	6530-0015	5/8" PLASTIC CLAMP	30
23	7500-0051	LOCKING PIN CABLE	4
24	7500-0054	QUICK RELEASE PIN (5-3/4")	1

ITEM	PART NO.	DESCRIPTION	QTY
25	7500-0070	SERIAL NUMBER PLATE	1
26	7500-0071	DRIVE RIVET	4
27	7500-0129	QUICK RELEASE PIN (6-1/2")	1
28	8300-5097	FORK POCKET SPACER	2
29	8701-0816	1/2-13 x 2" F.H.S.C.S.	4
30	8901-0400	1/4-20 ELASTIC LOCK NUT	2
31	8901-0500	5/16-18 ELASTIC LOCK NUT	2
32	9001-0416	1/4-20 X 2 HHCS	4
33	9001-0428	1/4-20 X 3 1/2 HHCS	2
34	9001-0608	3/8-16 X 1" H.H.C.S.	8
35	9401-0400	1/4-20 HEX NUT	4
36	9402-0800	1/2-20 HEX NUT	8
37	9521-0600	3/8-16 SELF LOCKING JAM NUT	8
38	9521-0800	1/2-13 SELF-LOCKING JAM NUT	4
39	9600-0400	1/4" FLAT WASHER	4
40	9600-0500	5/16" FLAT WASHER	4
41	9600-0600	3/8" FLAT WASHER	8
42	9600-0700	7/16" FLAT WASHER	4
43	9700-0400	1/4" LOCK WASHER	4
44	9700-0800	1/2" LOCK WASHER	8
45	9902-0814	1/2-20 x 1 3/4 STUD	8
46	372-8222-003	R.H. SPACER WELDMENT	1
47	372-8222-004	L.H. SPACER WELDMENT	1
48	372-8222-006	CARABINER, STAINLESS STEEL	2

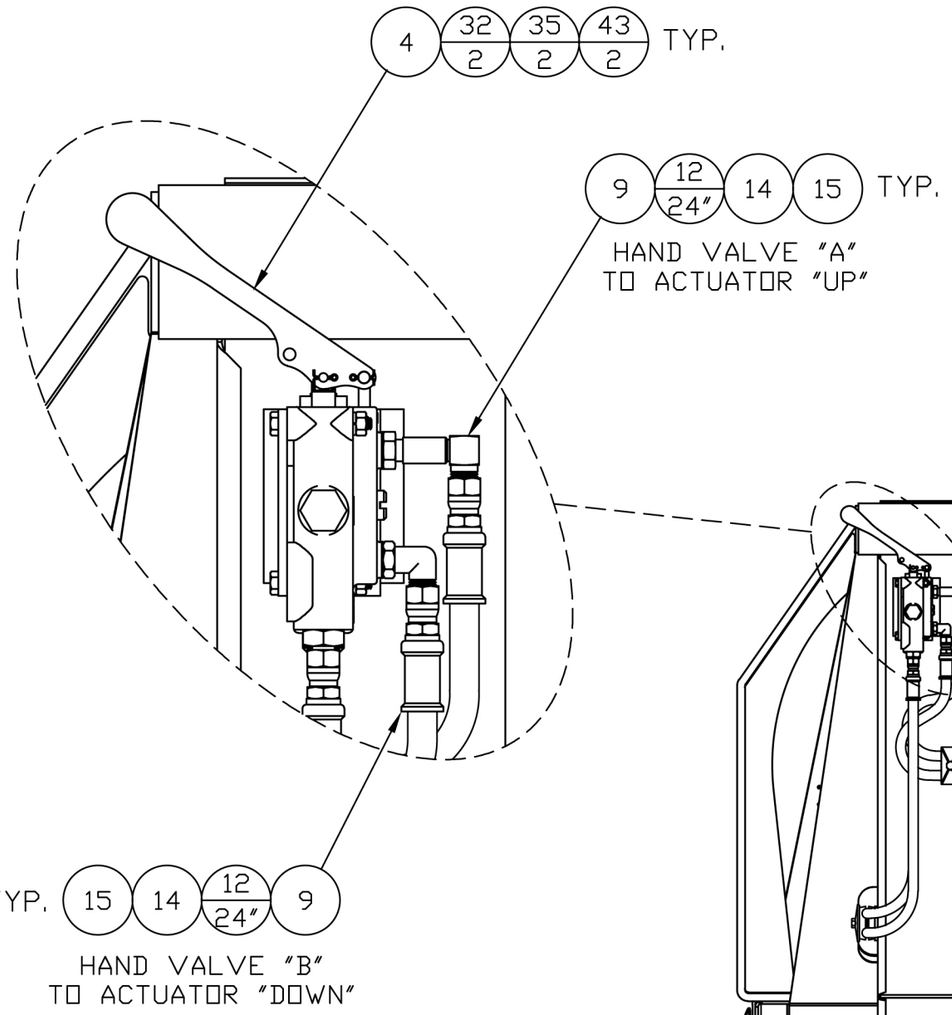

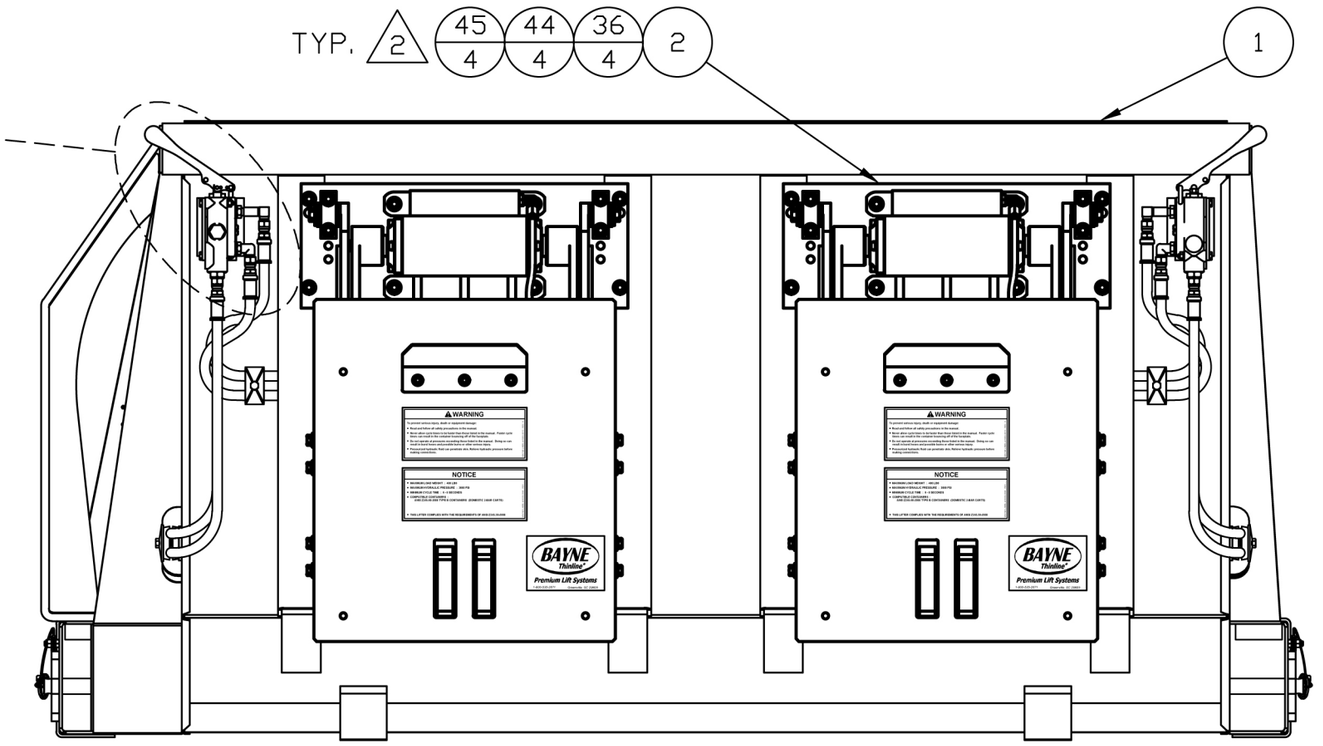

CONFIDENTIAL

This drawing is private and confidential communication and the property of BAYNE MACHINE WORKS, INC., Greenville, S.C. It MUST NOT be copied or lent without consent of BAYNE MACHINE WORKS, INC., and must be promptly returned with tender and/or completion of order to the purchasing department.

SCALE:	SHEET	OF	REV.
1=10	1	4	–

Holtz Industries,Inc.	TOLERANCES IF NOT NOTED: 0.000 ±0.005 – 0.00 ±0.015 0/0 ±1/32 – ANGULAR ±0.25°	DRAWN BY:	DATE: 02/27/17	CHK'D BY:	DATE:	TITLE: DUAL TL1120 FRONT MOUNT CARRY CAN	DWG. NO.: BAYNE-1910-0025

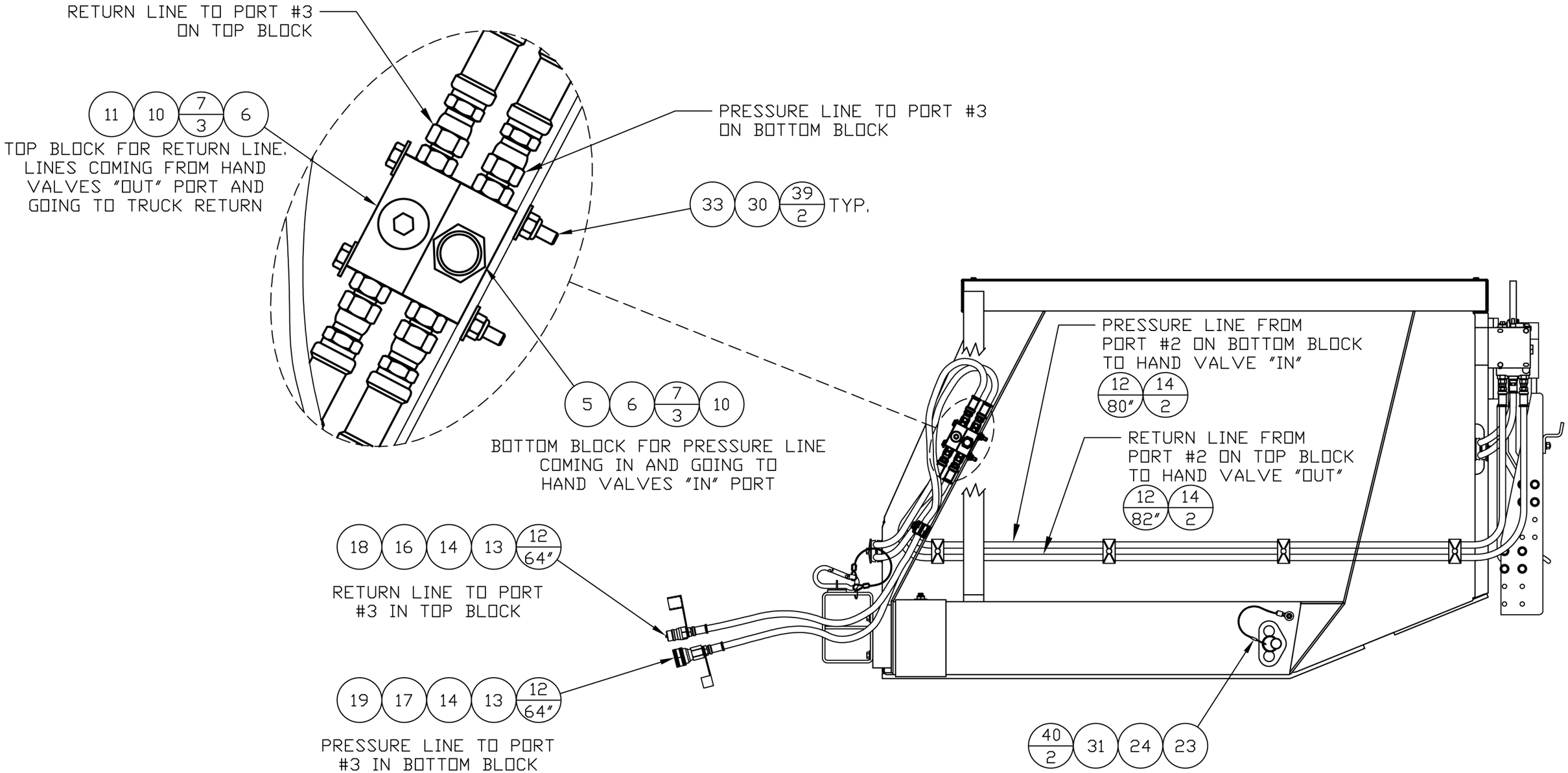

CONFIDENTIAL

This drawing is private and confidential communication and the property of BAYNE MACHINE WORKS, INC., Greenville, S.C. It MUST NOT be copied or lent without consent of BAYNE MACHINE WORKS, INC., and must be promptly returned with tender and/or completion of order to the purchasing department.

SCALE:	SHEET	OF	REV.
1=10	2	4	–

Holtz Industries,Inc.	TOLERANCES IF NOT NOTED: 0.000 ±0.005 – 0.00 ±0.015 0/0 ±1/32 – ANGULAR ±0.25°	DRAWN BY:	DATE: 02/27/17	CHK'D BY:	DATE:	TITLE: DUAL TL1120 FRONT MOUNT CARRY CAN	DWG. NO.: BAYNE-1910-0025

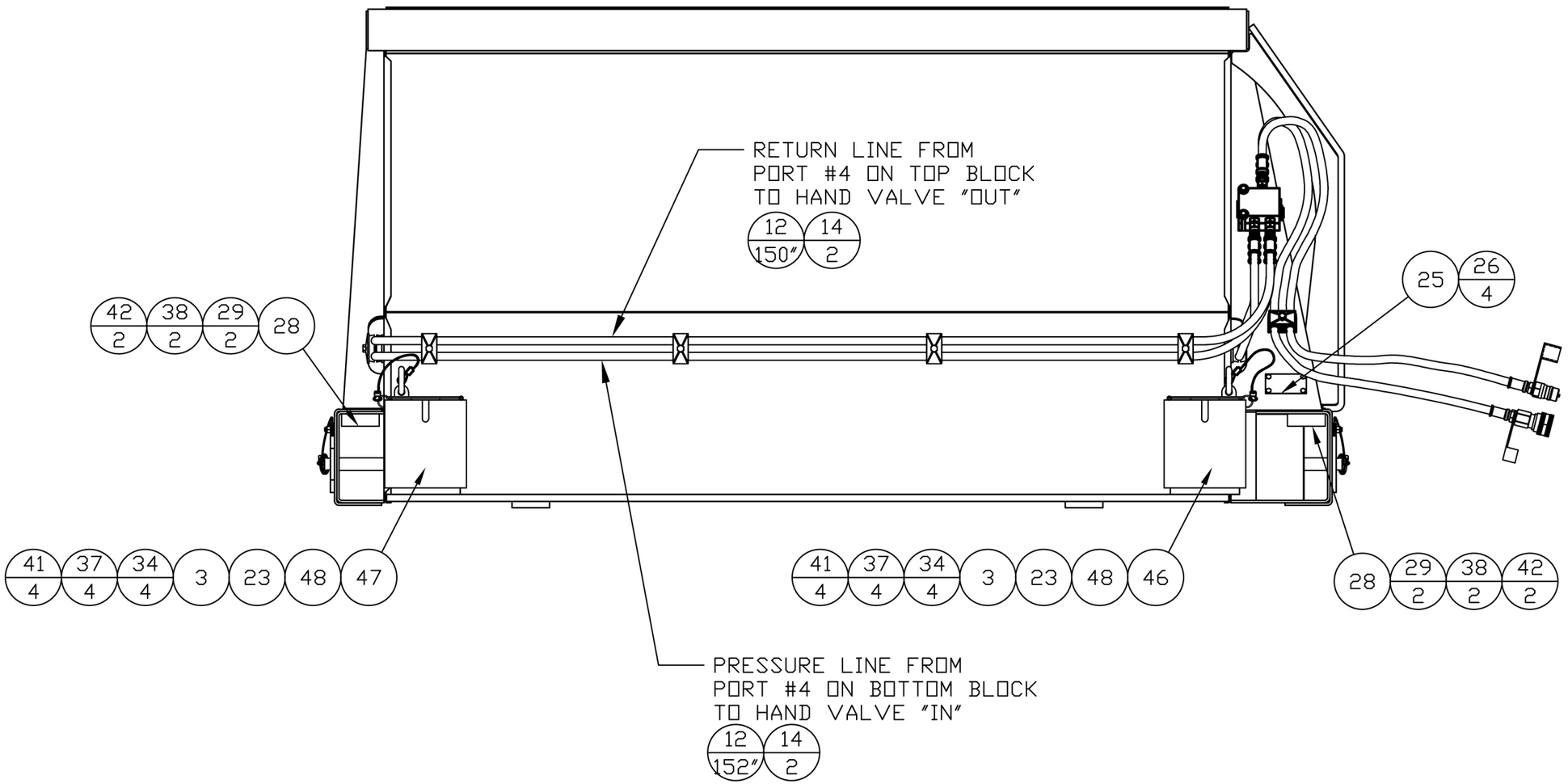

CONFIDENTIAL

This drawing is private and confidential communication and the property of BAYNE MACHINE WORKS, INC., Greenville, S.C. It MUST NOT be copied or lent without consent of BAYNE MACHINE WORKS, INC., and must be promptly returned with tender and/or completion of order to the purchasing department.

SCALE:	SHEET	OF	REV.
1=10	3	4	–

Holtz Industries,Inc.	TOLERANCES IF NOT NOTED: 0.000 ±0.005 – 0.00 ±0.015 0/0 ±1/32 – ANGULAR ±0.25°	DRAWN BY: WTS	DATE: 02/27/17	CHK'D BY:	DATE:	TITLE: DUAL TL1120 FRONT MOUNT CARRY CAN	DWG. NO.: BAYNE-1910-0025

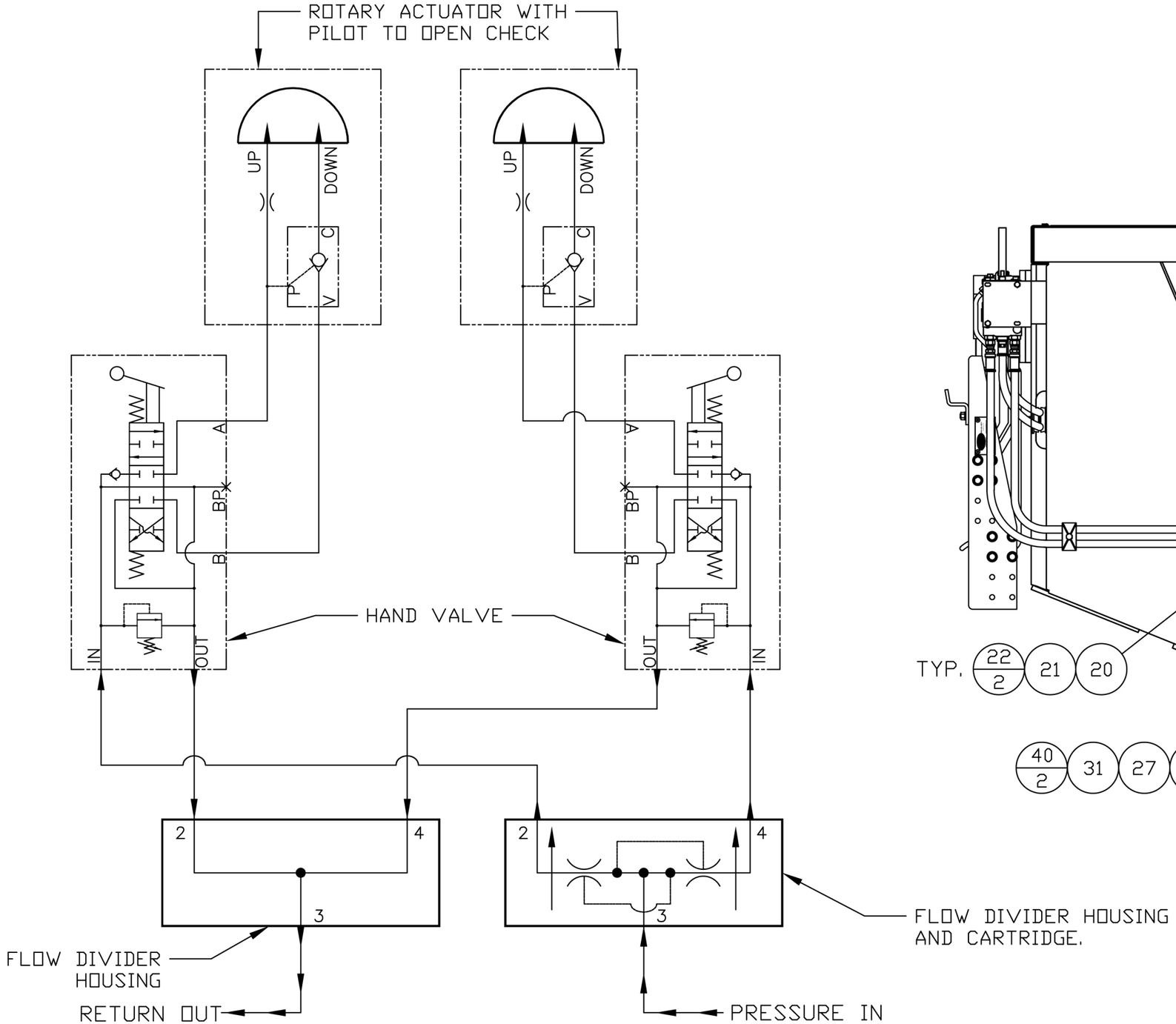

HYDRAULIC SCHEMATIC

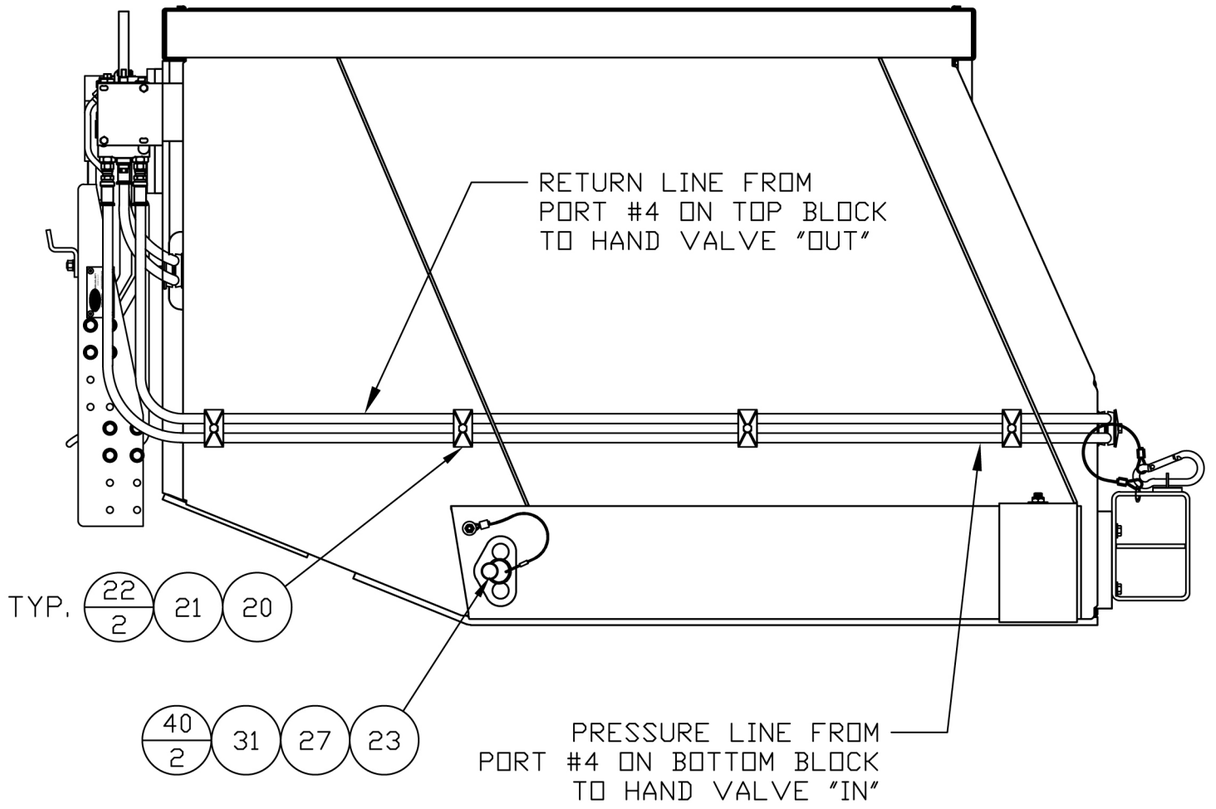

CONFIDENTIAL

This drawing is private and confidential communication and the property of BAYNE MACHINE WORKS, INC., Greenville, S.C. It MUST NOT be copied or lent without consent of BAYNE MACHINE WORKS, INC., and must be promptly returned with tender and/or completion of order to the purchasing department.

SCALE:	SHEET	OF	REV.
1=10	4	4	–

	TOLERANCES IF NOT NOTED:	DRAWN BY:	DATE:	CHK'D BY:	DATE:	TITLE:	DWG. NO.:
Holtz Industries,Inc.	0.000 ±0.005 – 0.00 ±0.015 0/0 ±1/32 – ANGULAR ±0.25°	WTS	02/27/17			DUAL TL1120 FRONT MOUNT CARRY CAN	BAYNE-1910-0025